IGA 120

PRODUCTION DATE	PACKING CODE

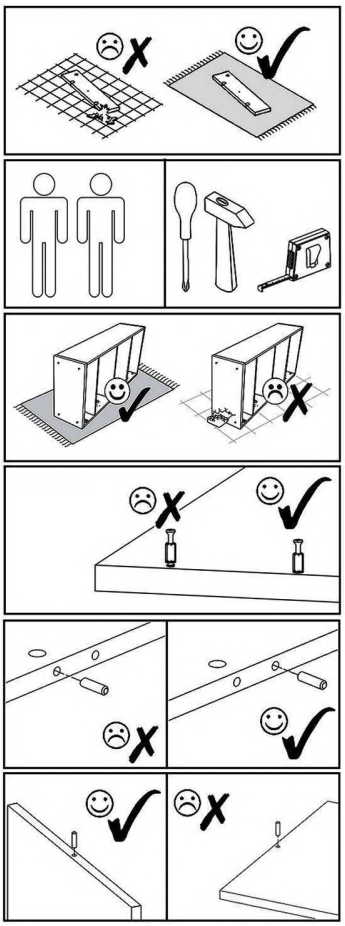

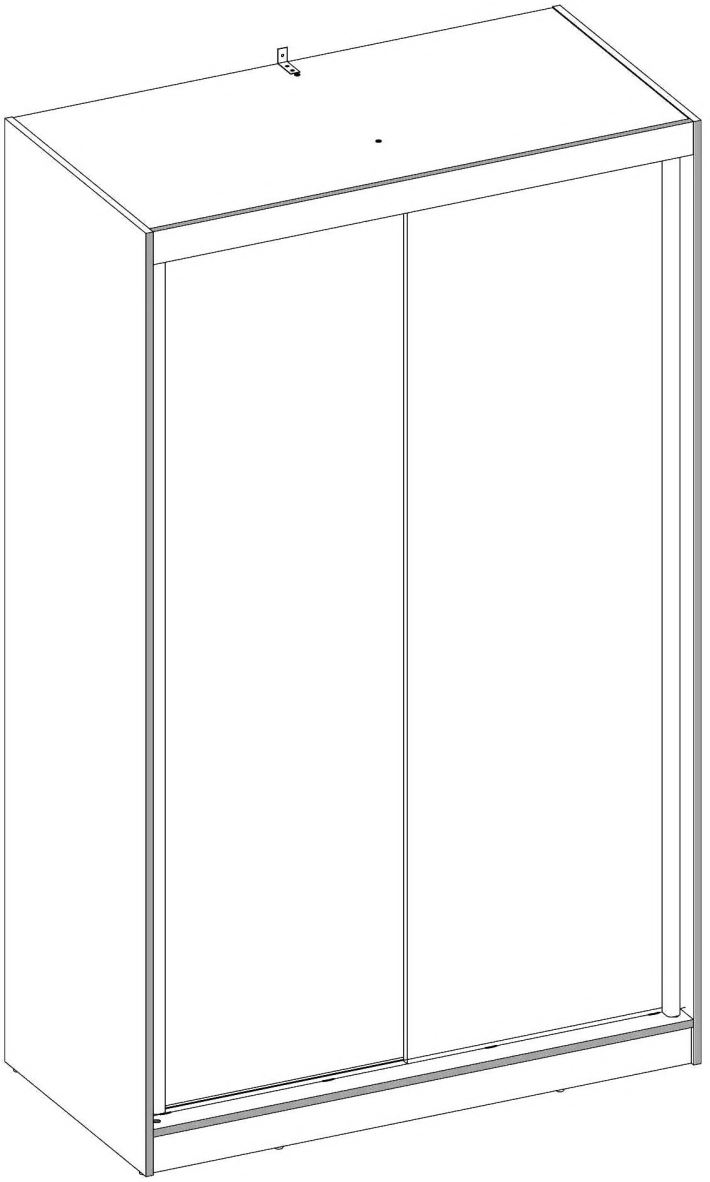

V55 x4	V56 x4	V20 x8	B1 S-A ø17/4mm x10	B1 Ant. ø17/4mm x10	B1 B ø17/4mm x10	
V41 x1	V15 x16	V50 L=568mm x4	S6 2,5x20 x16	V12 GLUE x1	V25 x2	T4 x1
N1 L=35mm x23	M1 12x15mm x27	V8 L=565mm x1	S1 3,5x16mm x20	E1 8x30mm x24	E3 8x50mm x2	V19 x2	V21 L=1164mm x2
Z1 x150	F1 7x50mm x4	V16 5x16mm x8	F3 x1	S9 4x15 mm x24	N4 L=62mm x2	T1 x6	U7 L=1862mm x2

IM250317

IGA 120

PRODUCTION DATE	PACKING CODE

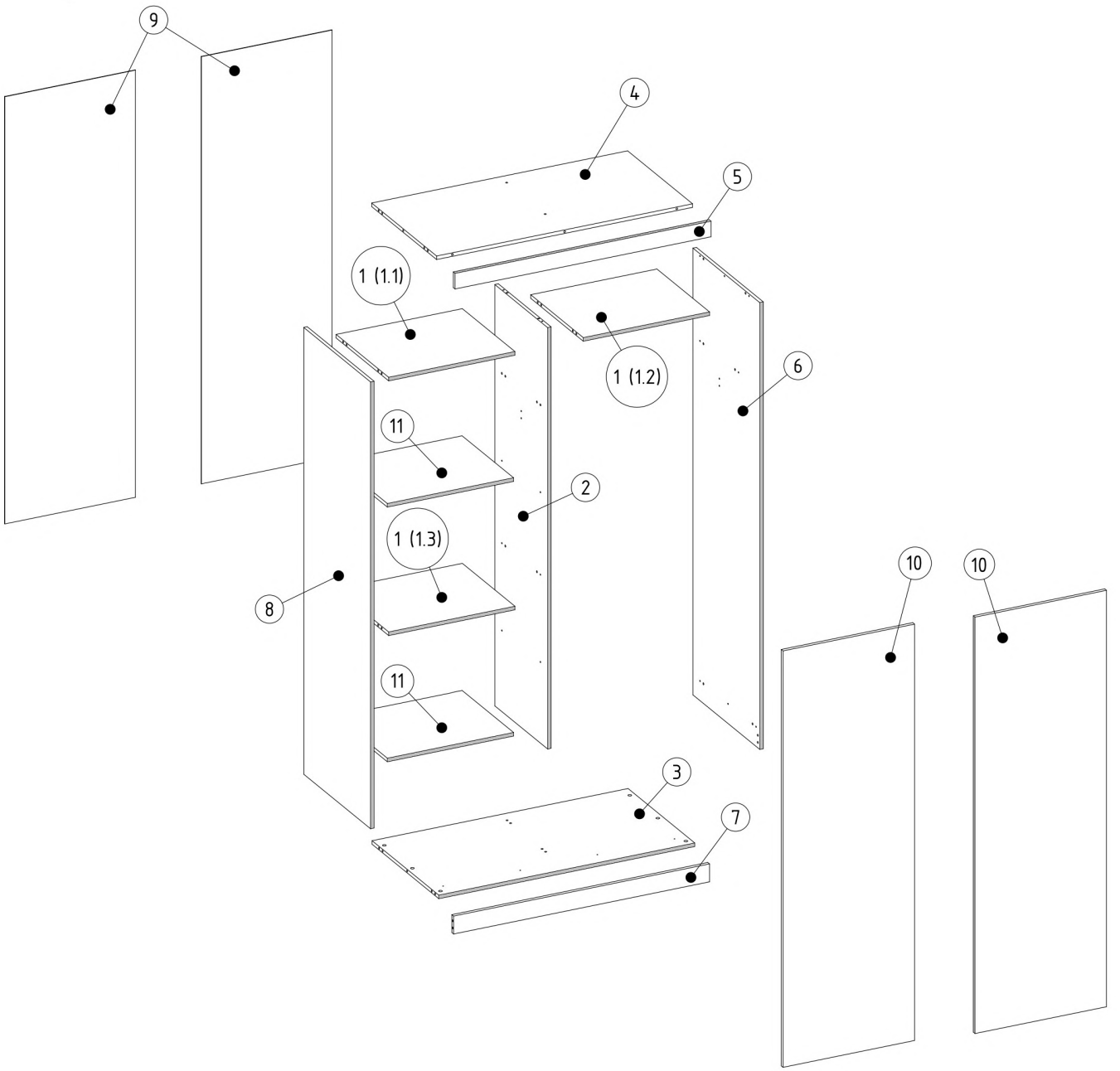

000307	11	2
000124	10	2
000267	9	2
000269	8	1
000302	7	1
000270	6	1
000303	5	1
000305	4	1
000304	3	1
000266	2	1
000306	1	3
ID	NUMBER	QUANTITY

M1	E1	E3
12x15mm x4	8x30mm x2	8x50mm x2

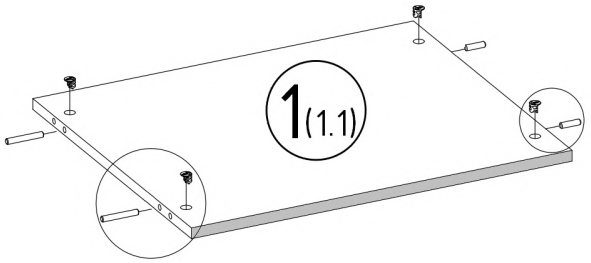



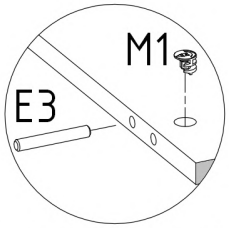

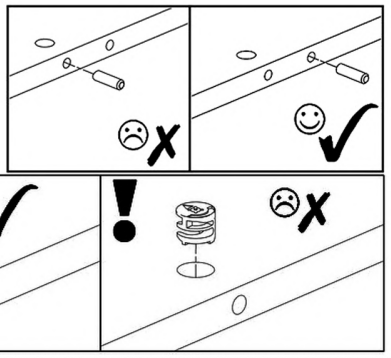

M1	E1
12x15mm x4	8x30mm x2

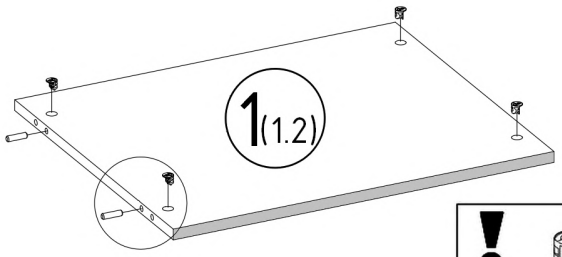

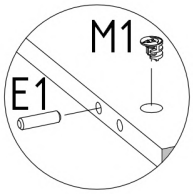

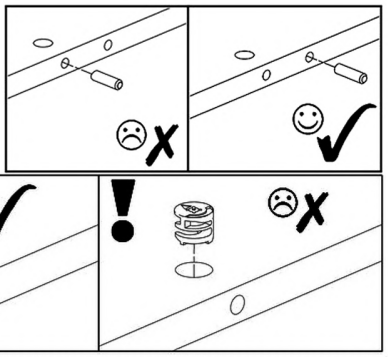

M1	E1
12x15mm x4	8x30mm x4

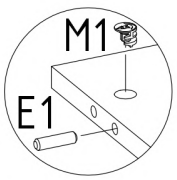

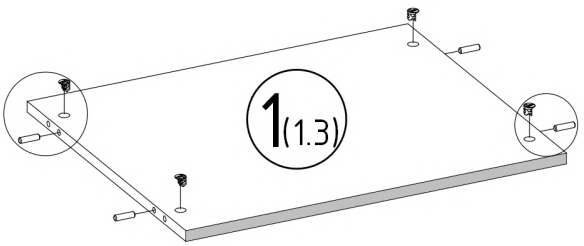



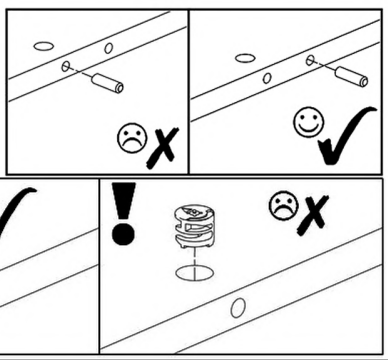

N1	V16	E1
L=35mm x2	5x16mm x4	8x30mm x4

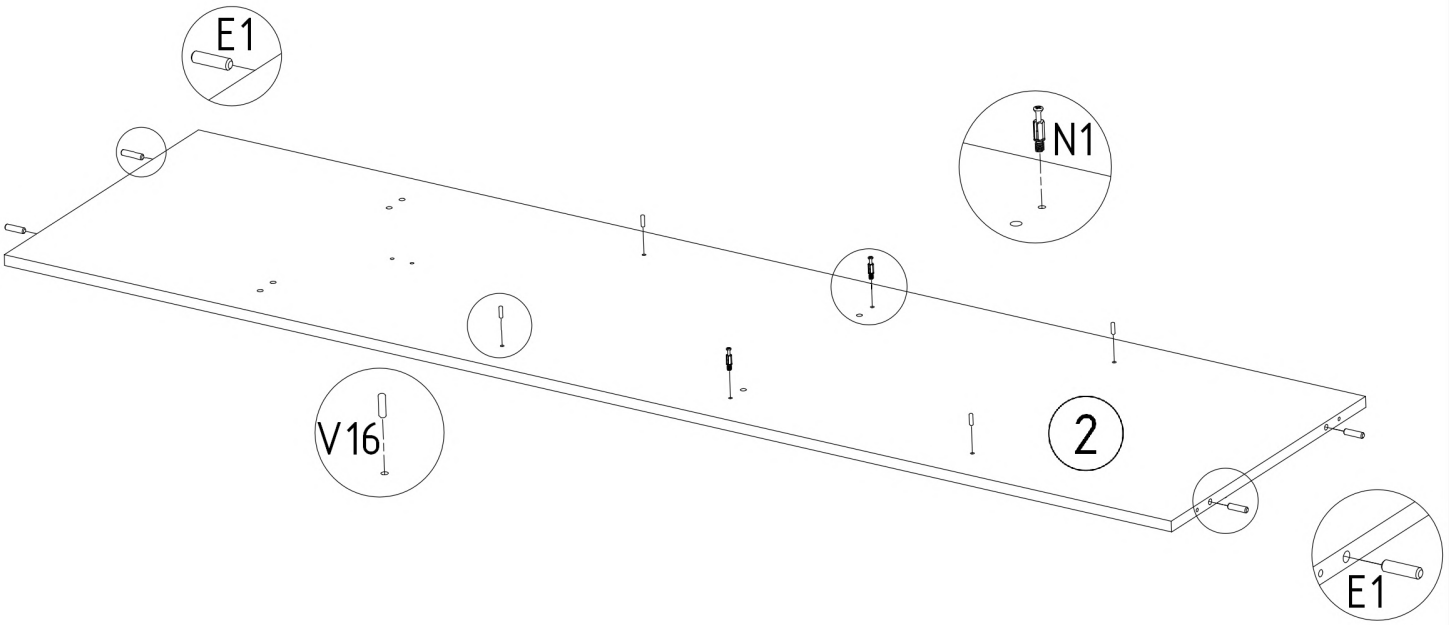

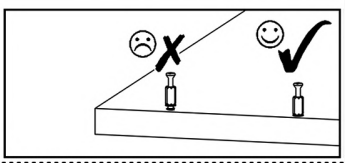

S1	V19
3,5x16mm x1	x1

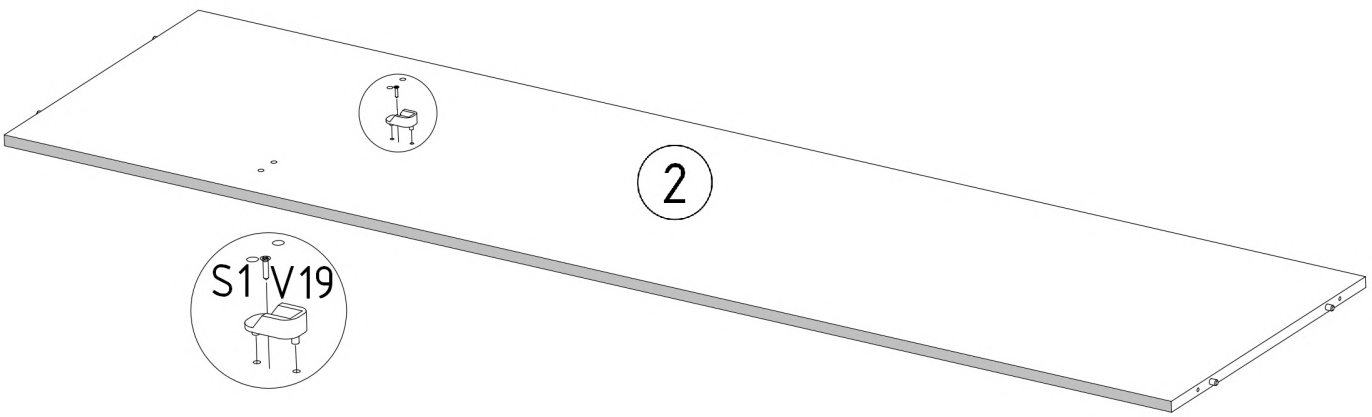

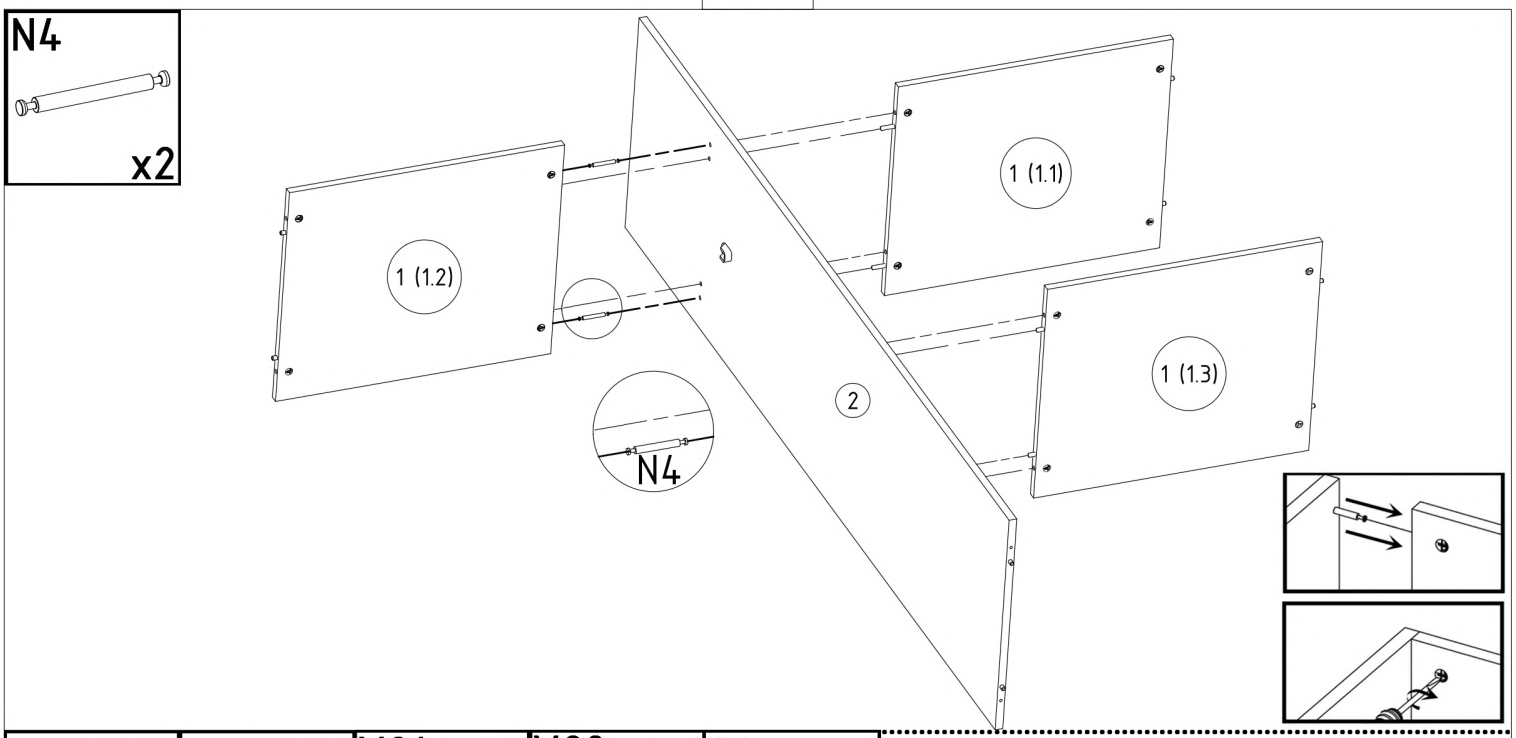
N4
x2
1 (1.1)
1 (1.2)
1 (1.3)
2
N4

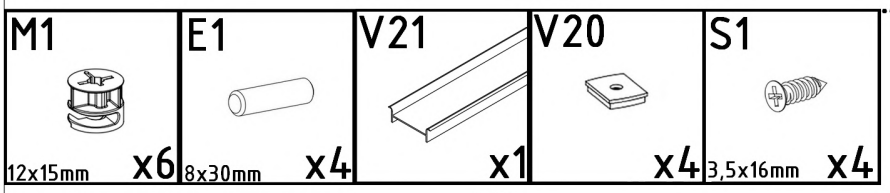
M1
12x15mm
x6
E1
8x30mm
x4
V21
x1
V20
x4
S1
3,5x16mm
x4

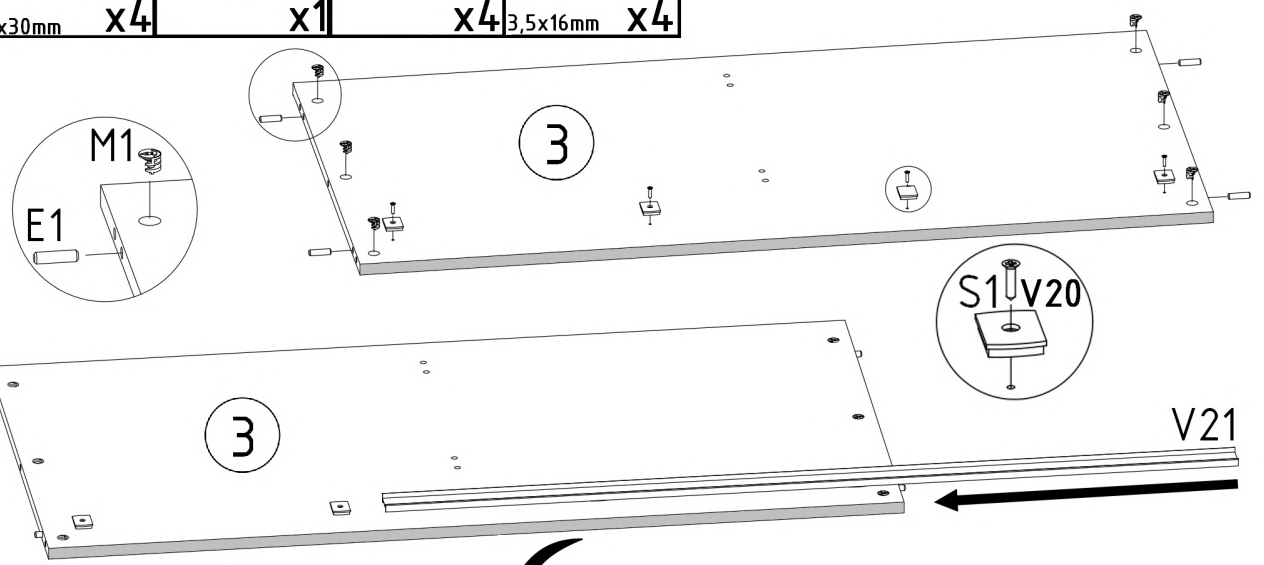
M1
E1
3
S1
V20
3
V21

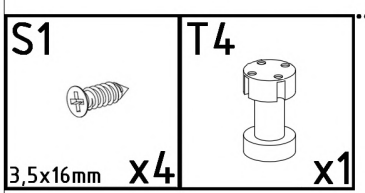
S1
3,5x16mm
x4
T4
x1

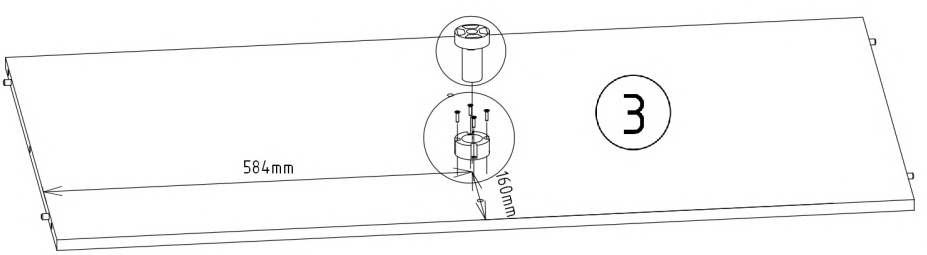
3
584mm
160mm

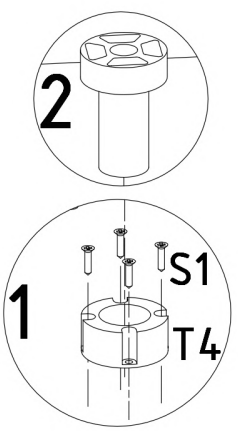
2
1
S1
T4

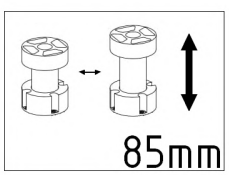
85mm

F1	F3
7x50mm x2	x1

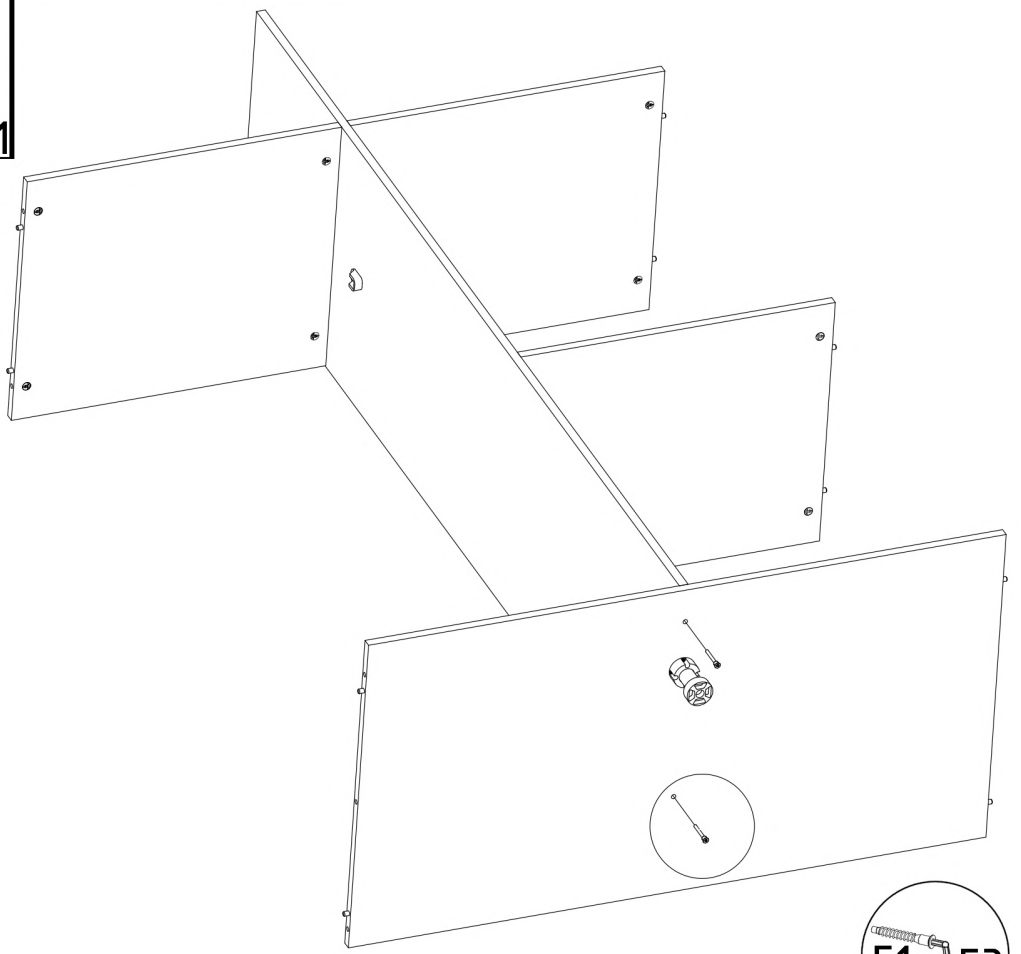

M1	E1	V21	V20	S1
12x15mm x9	8x30mm x4	x1	x4	3,5x16mm x4

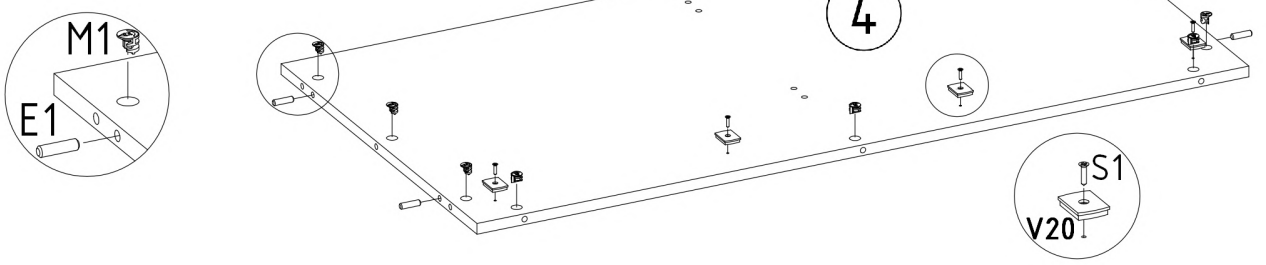

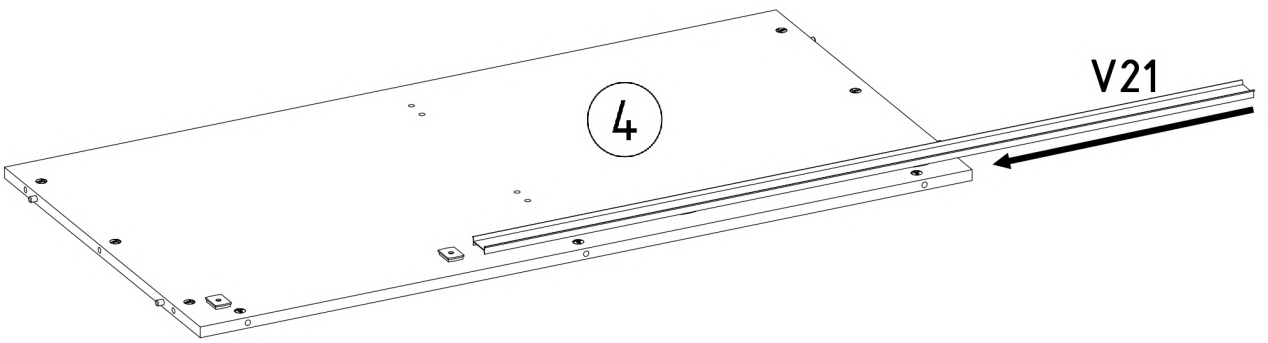

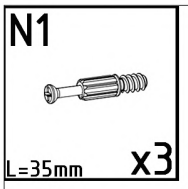
N1
L=35mm
x3

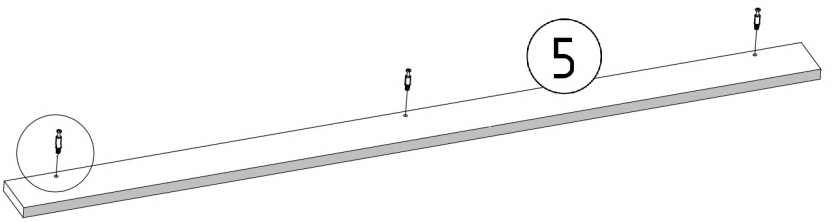
5

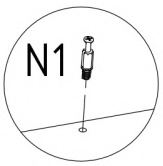
N1

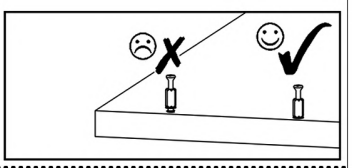

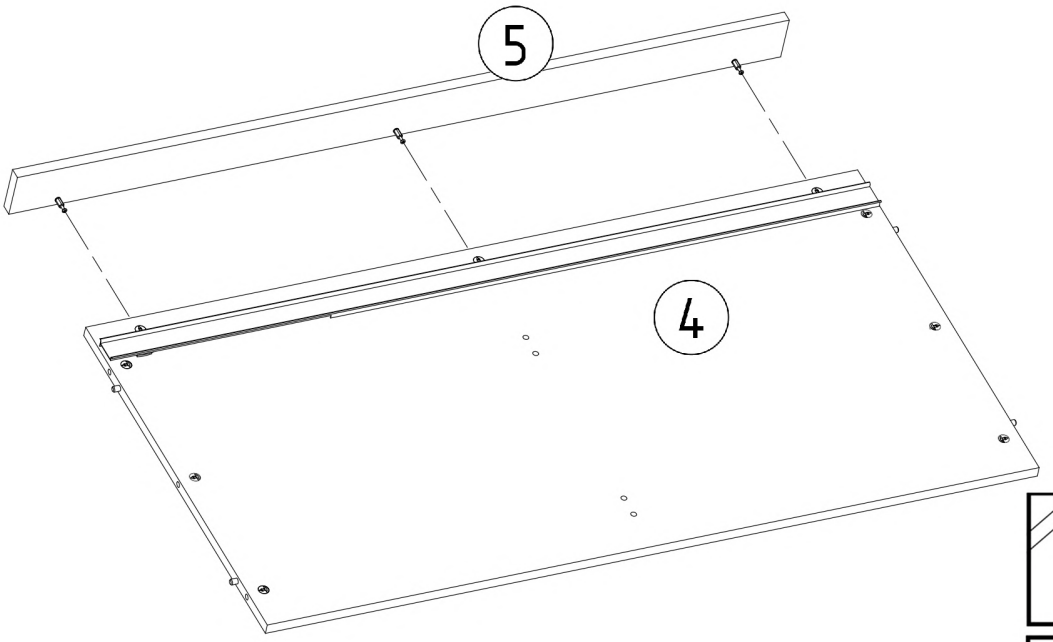
5
4

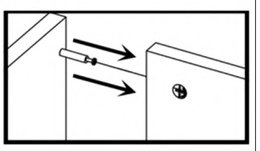

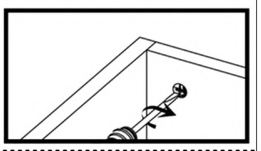

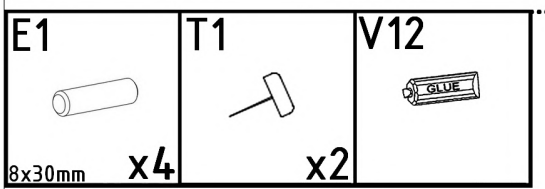
E1
8x30mm
x4
T1
x2
V12
GLUE


GLUE

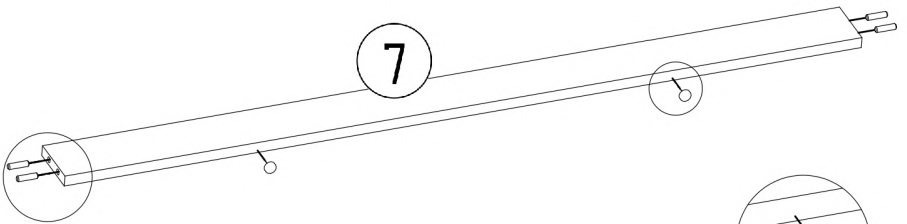
7

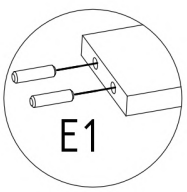
E1

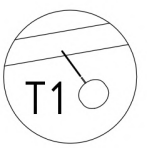
T1

F1	F3
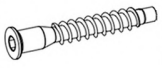	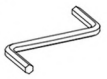
7x50mm x2	x1

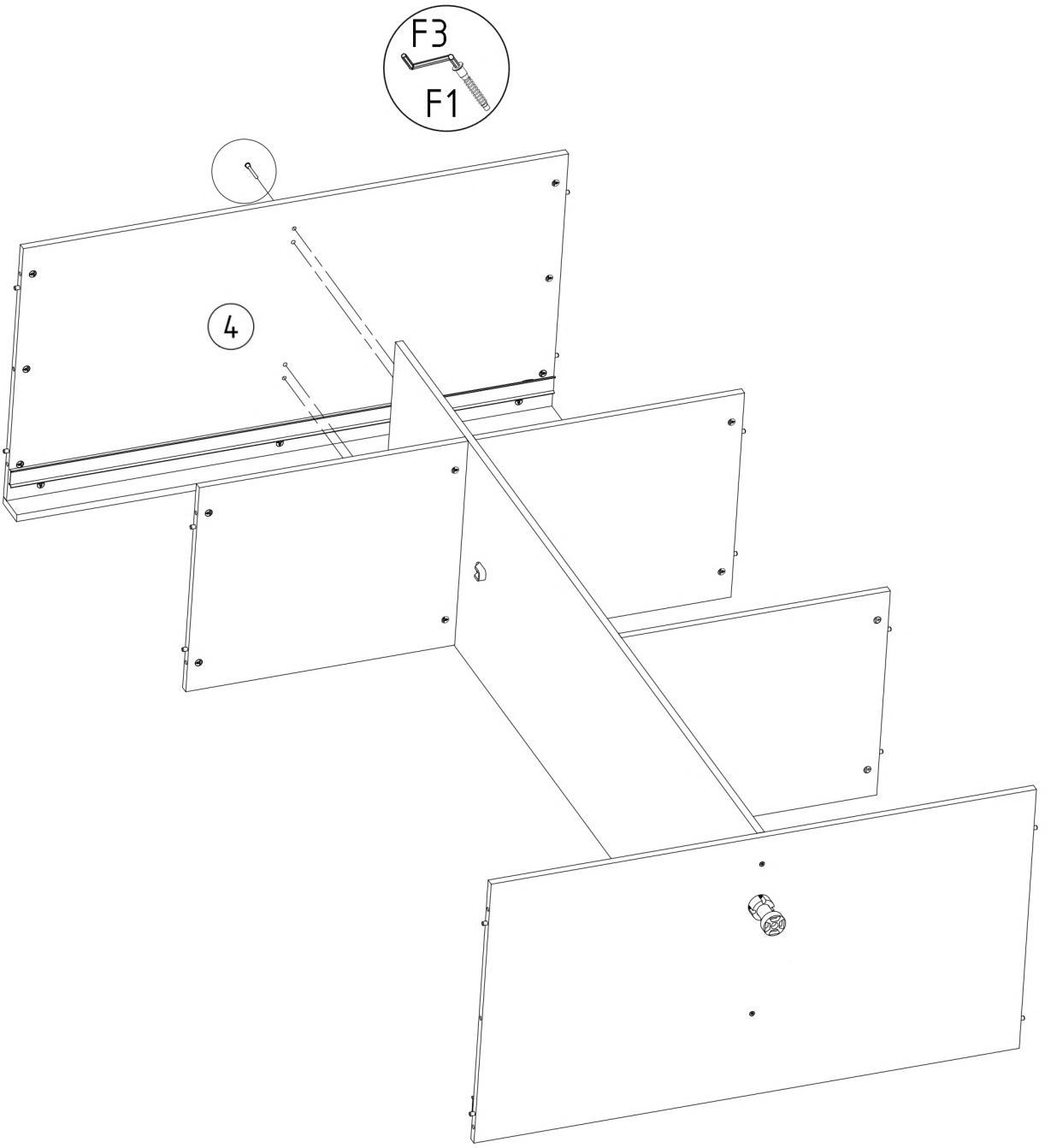

N1	T1	S1	V19
			
L=35mm x8	x2	3,5x16mm x1	x1

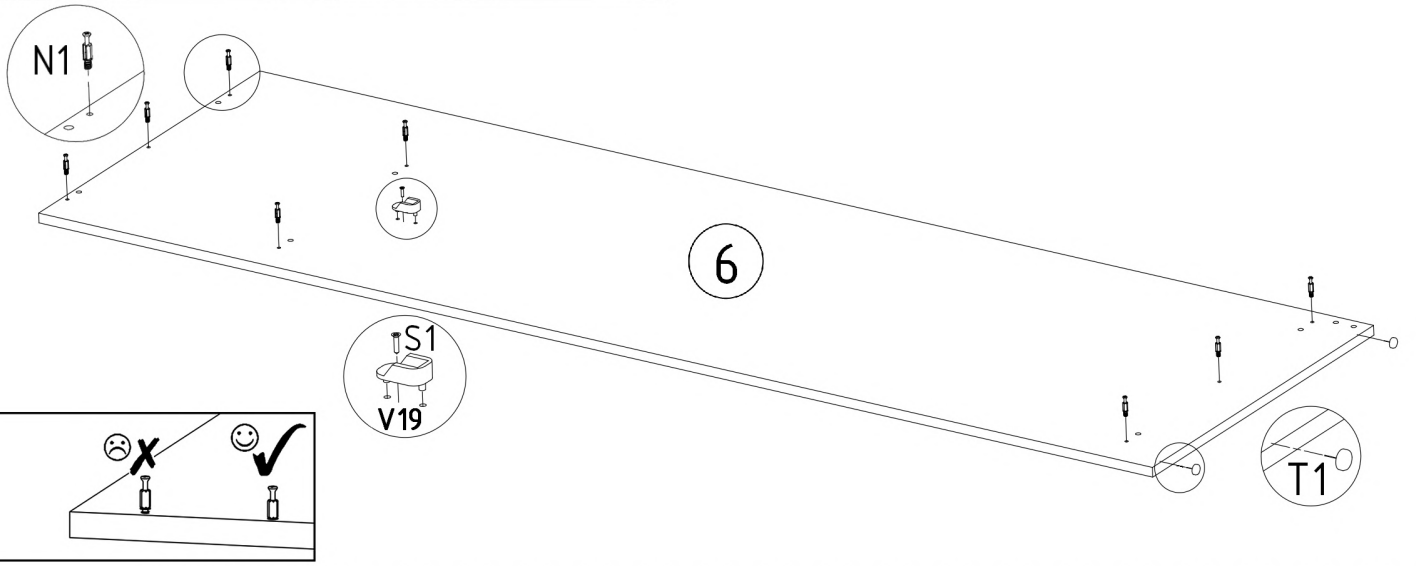

V12



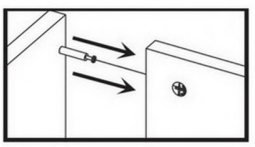

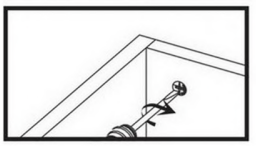

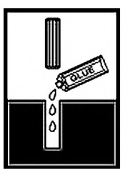

N1	V16	T1
		
L=35mm x10	5x16mm x4	x2

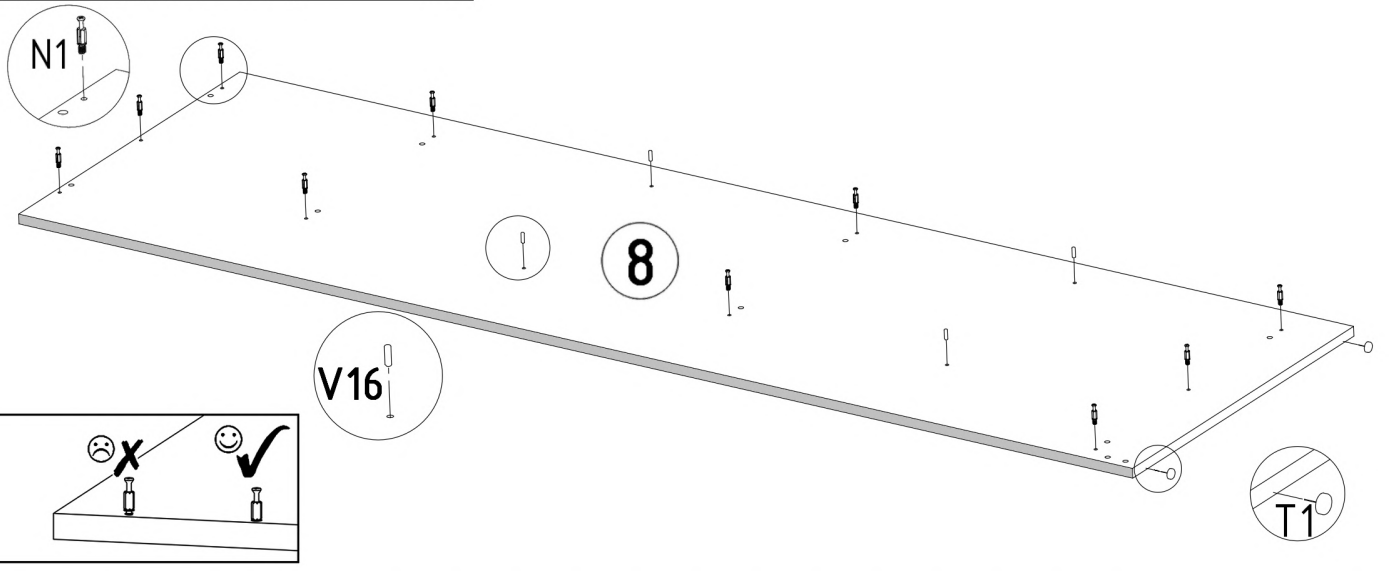

V12


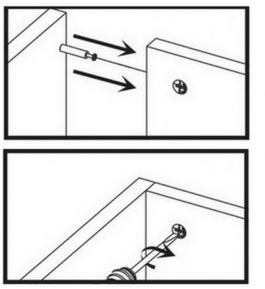

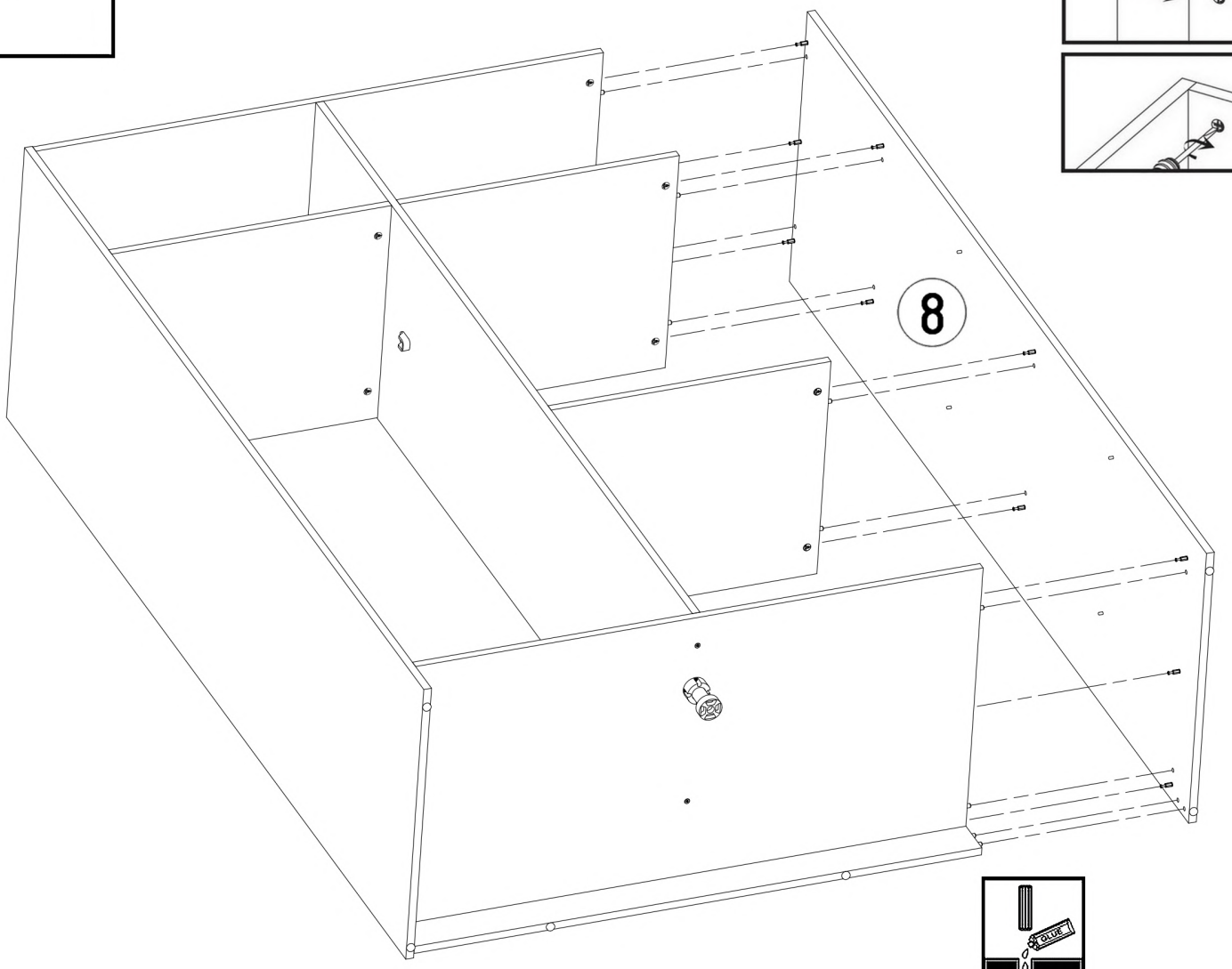

V15	S1	S6	Z1	V25
x16	3,5x16mm x4	2,5x20 x16	x150	x2

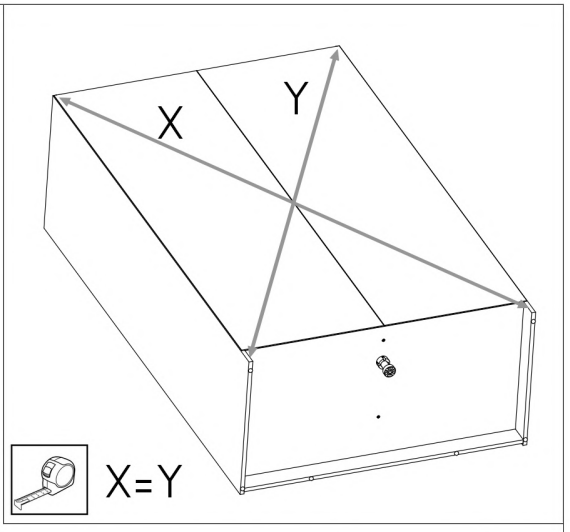

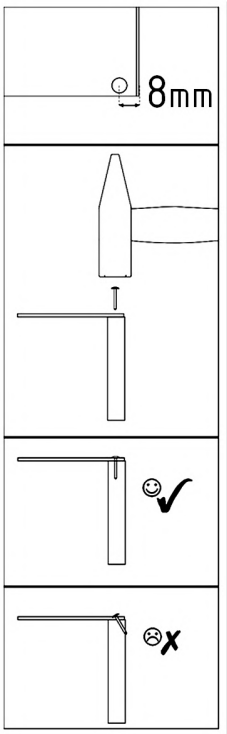

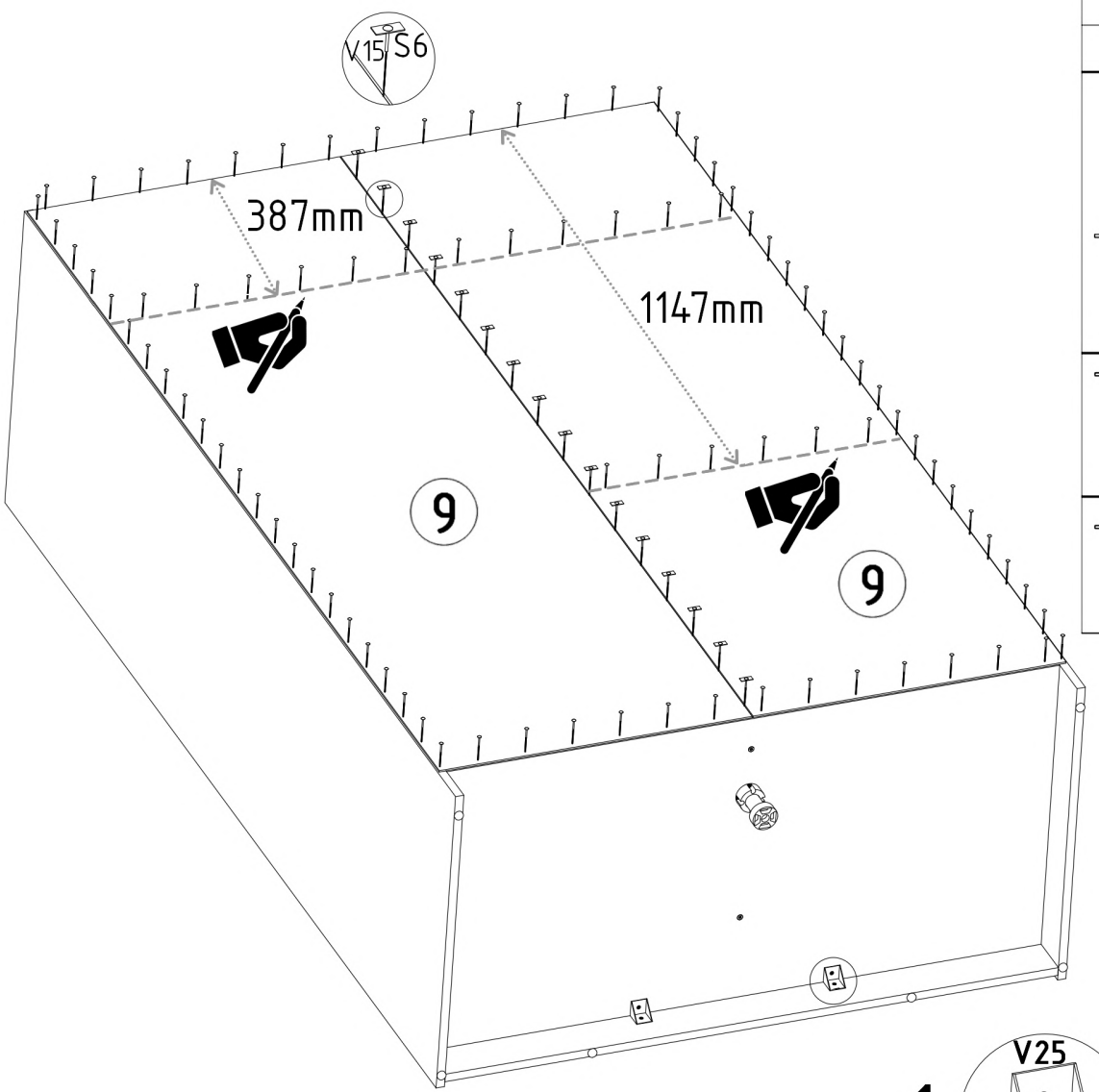

1

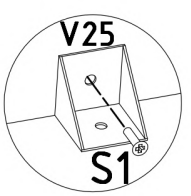

2

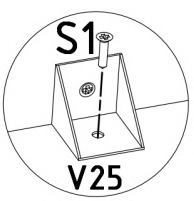

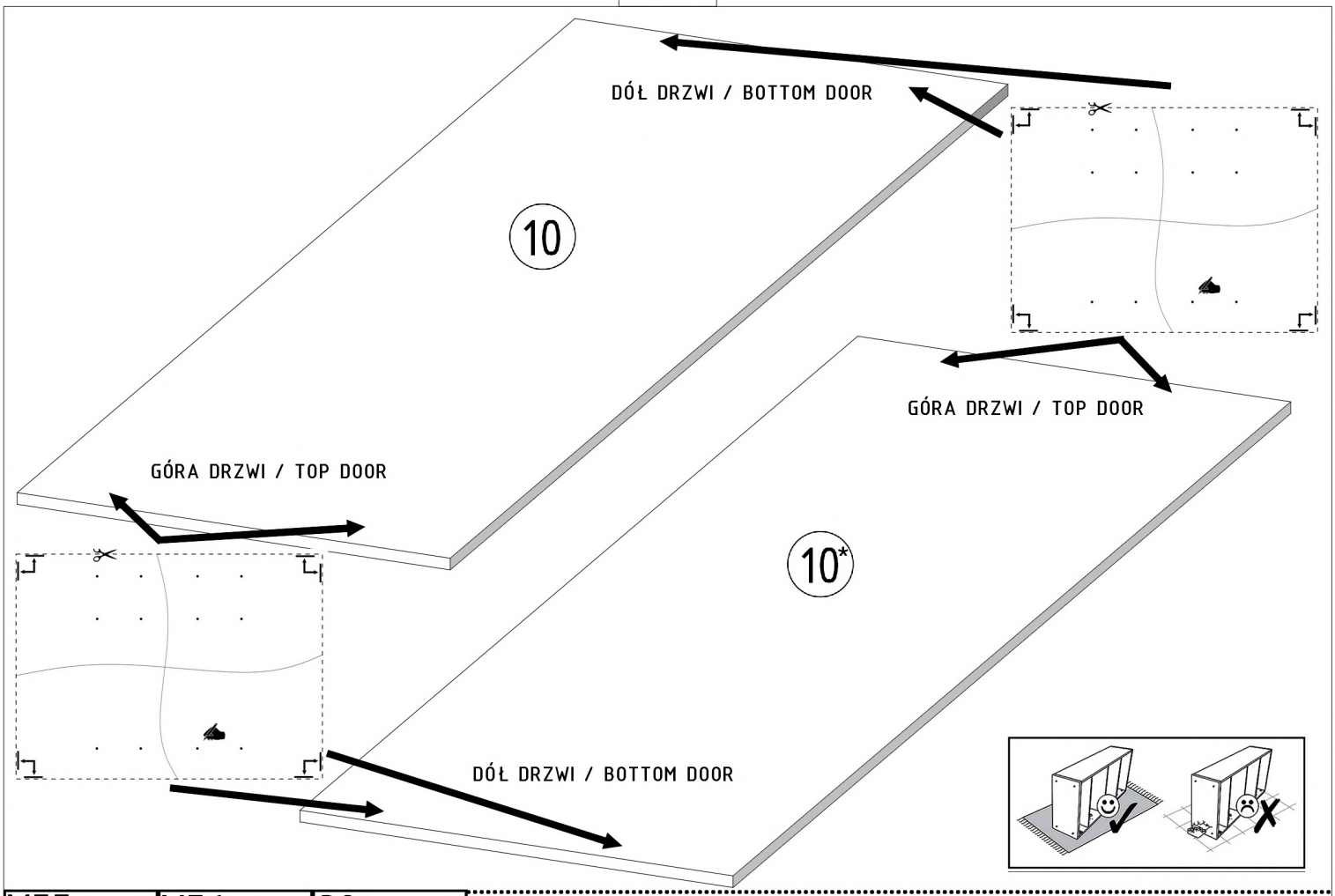
DÓŁ DRZWI / BOTTOM DOOR
10
GÓRA DRZWI / TOP DOOR
GÓRA DRZWI / TOP DOOR
10*
DÓŁ DRZWI / BOTTOM DOOR

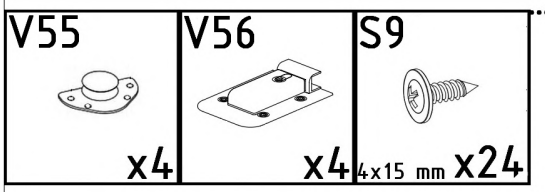
V55
x4
V56
x4
S9
4x15 mm x24

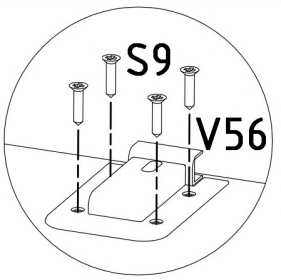
S9
V56

10
10*
S9
V55

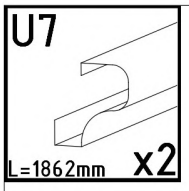
U7
L=1862mm
x2

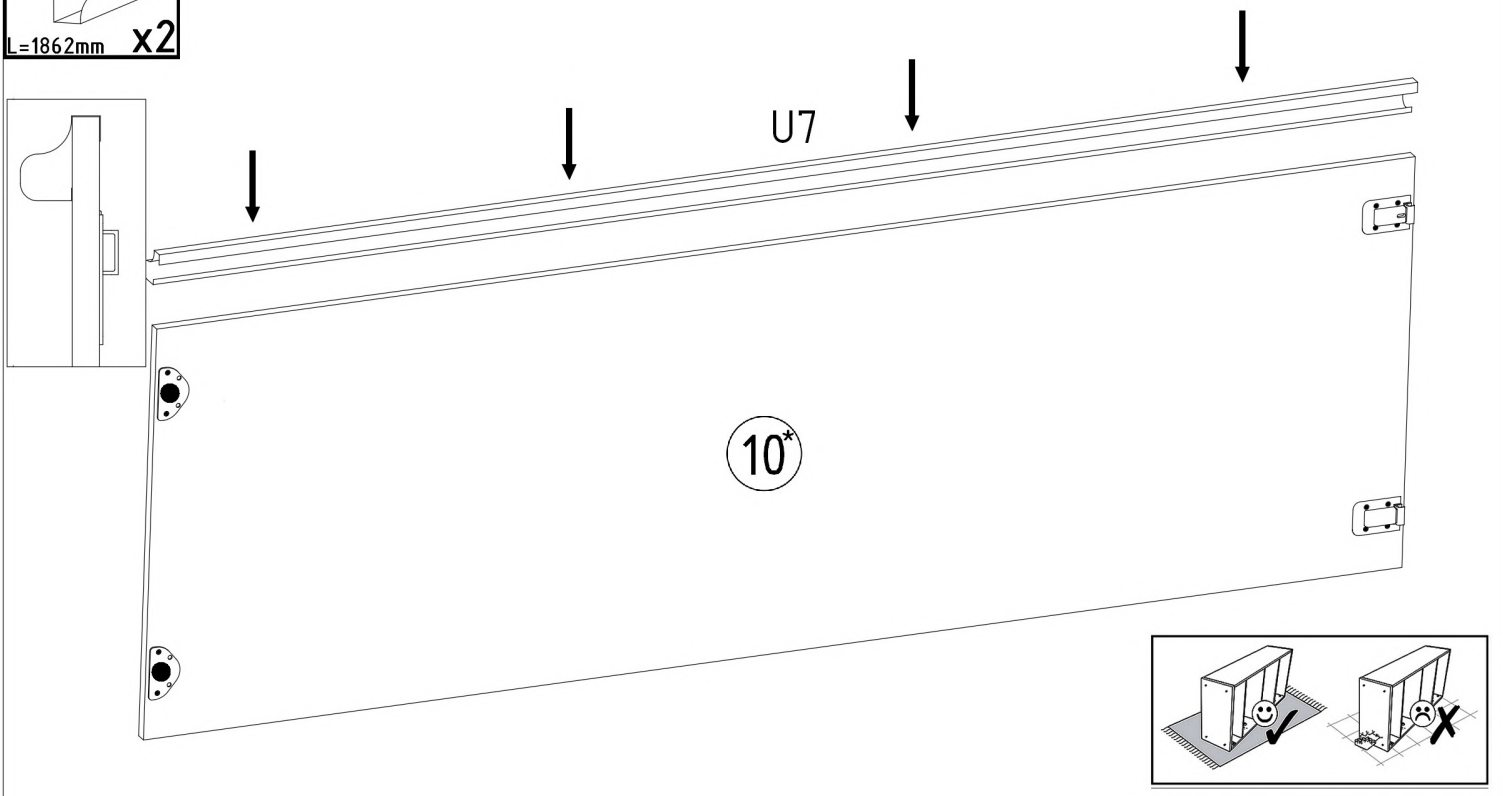
U7
10*

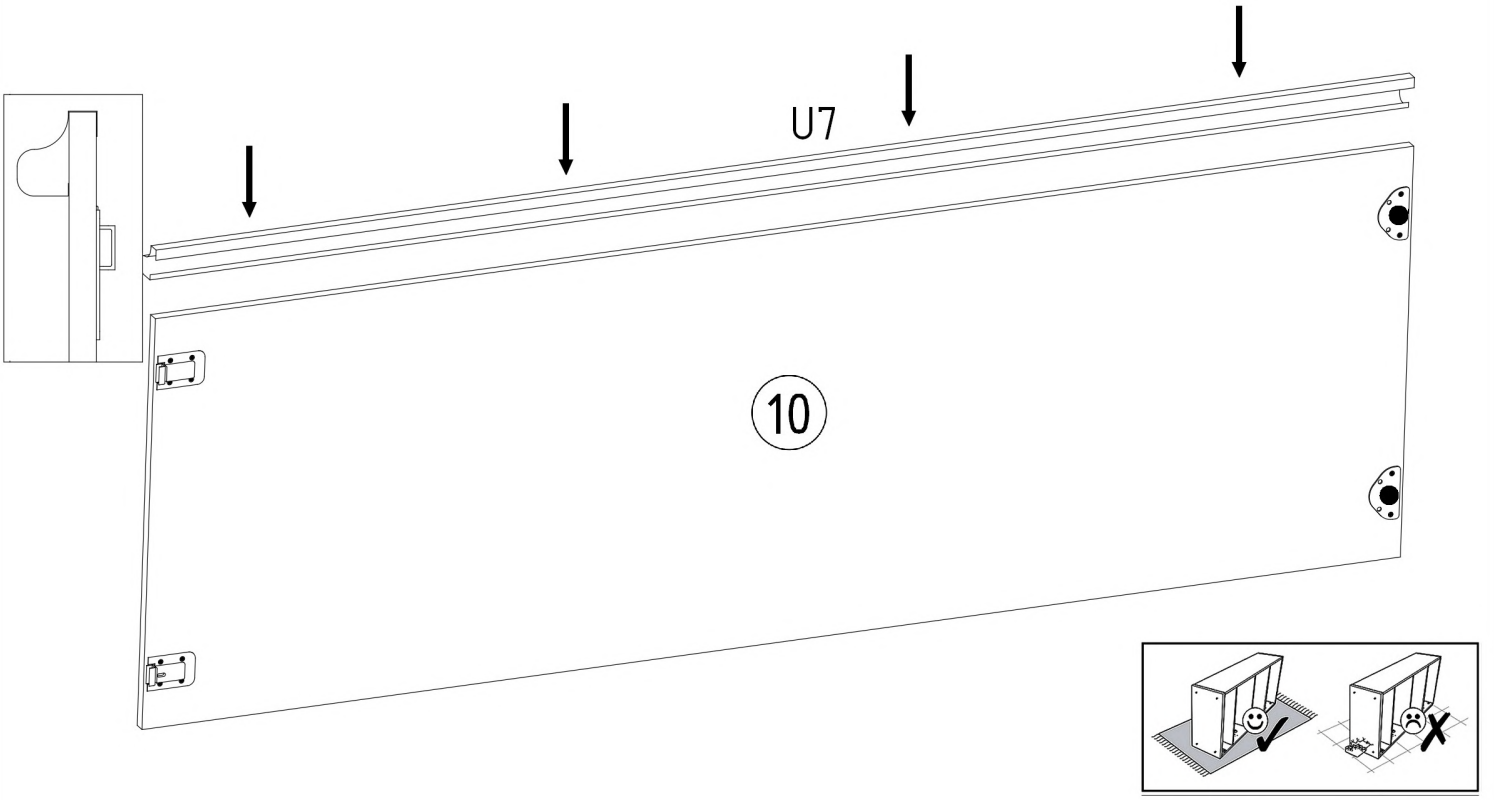
U7
10

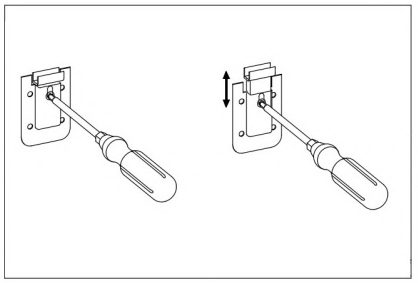

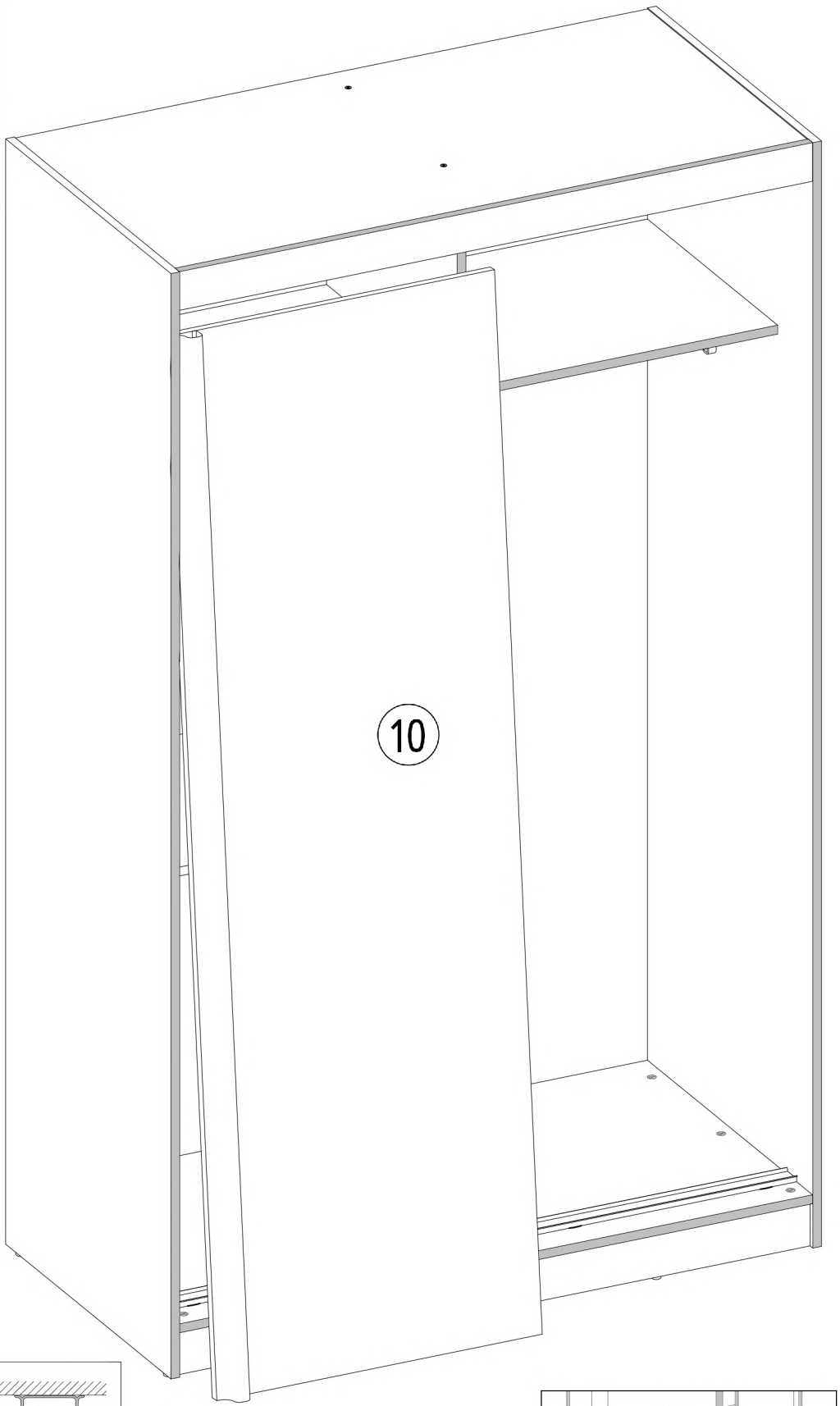
10

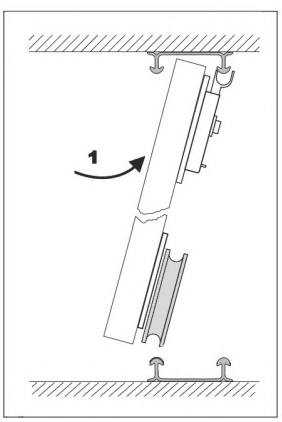
1

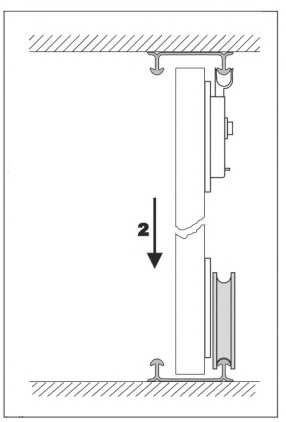
2

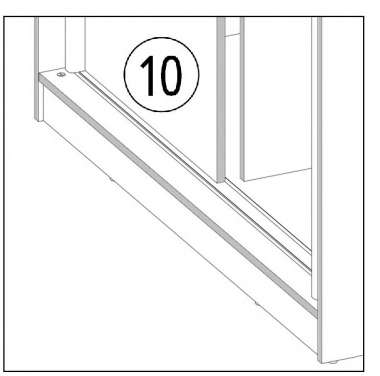
10

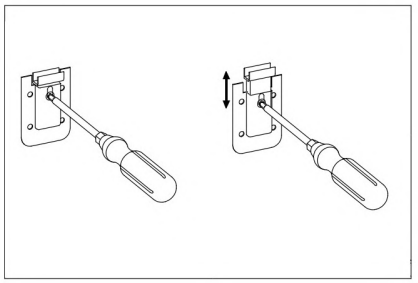

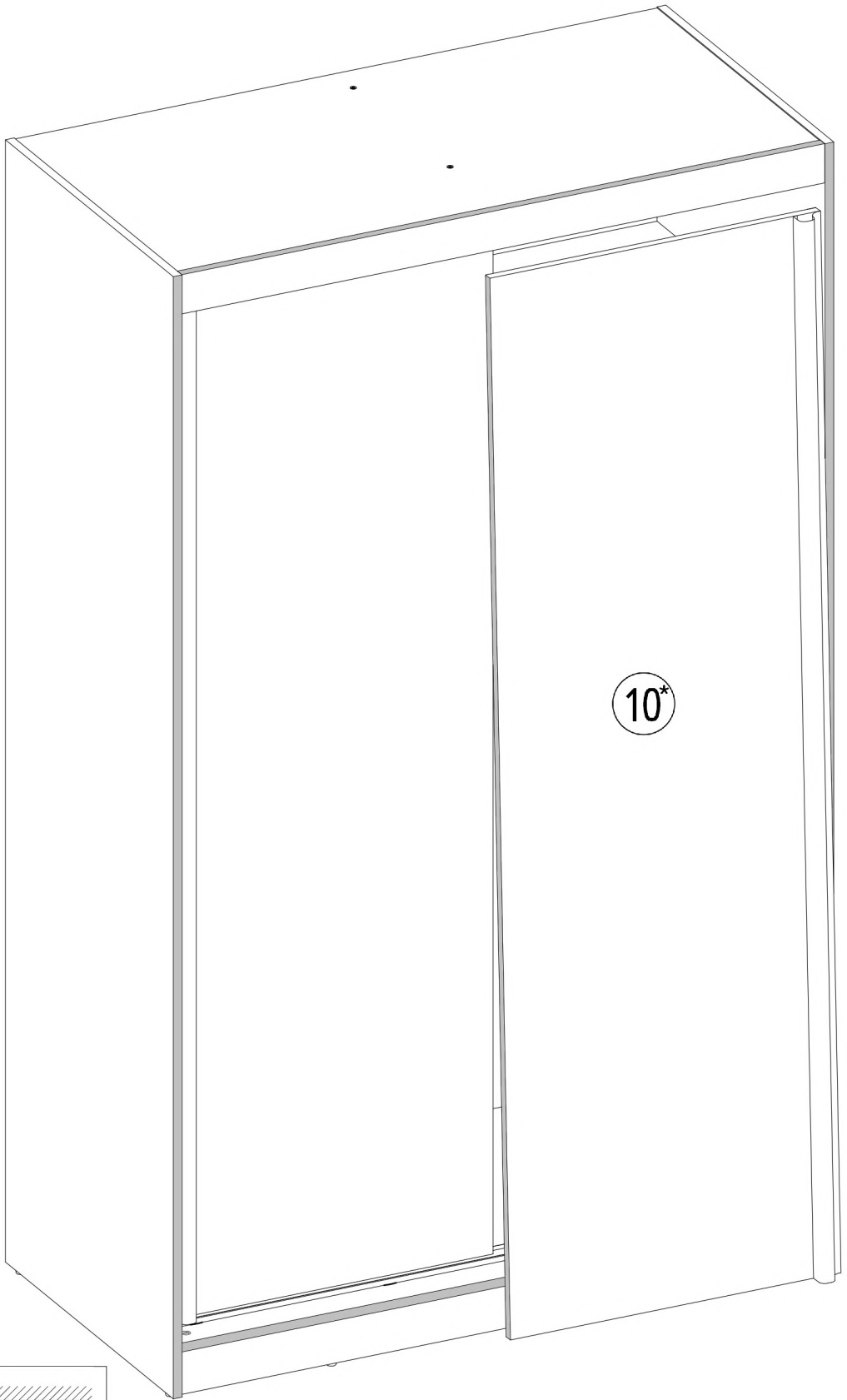
10*

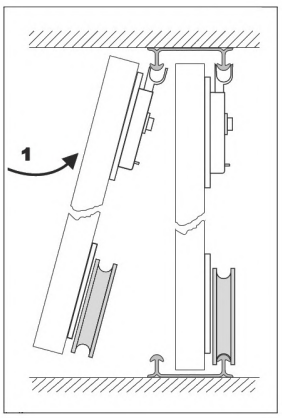
1

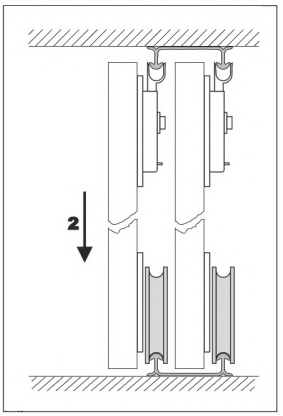
2

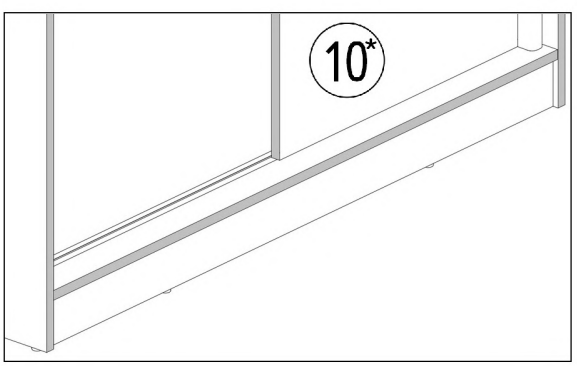
10*

V41	S1	V8	B1
x1	3,5x16mm x2	x1	ø17/4mm x5

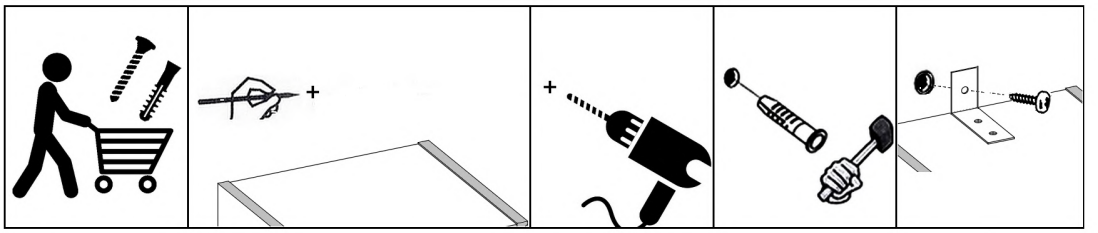



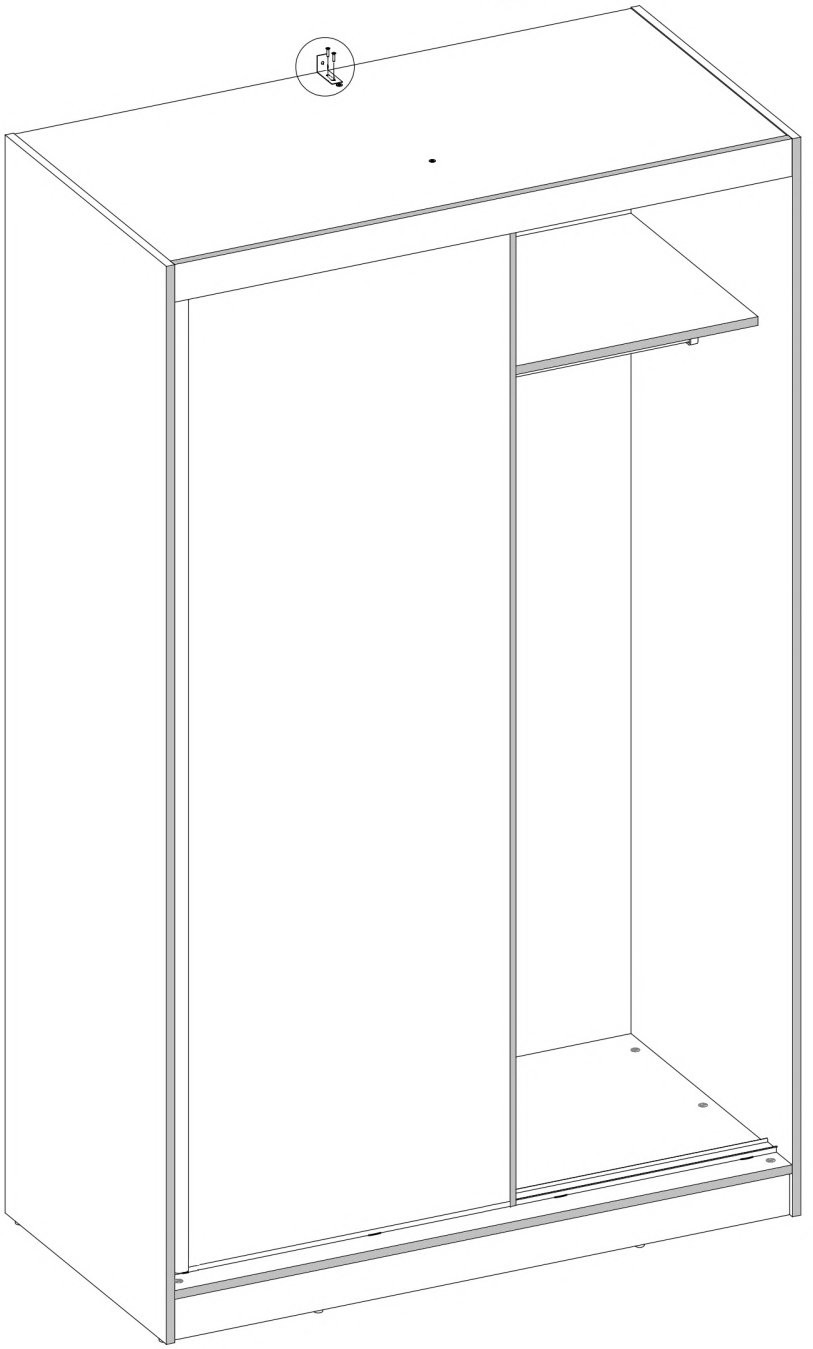

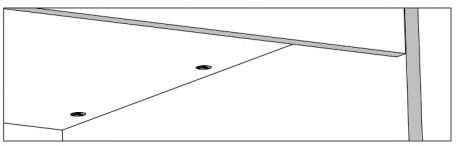

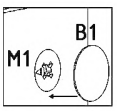

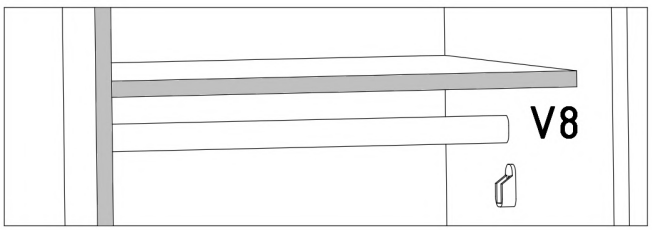

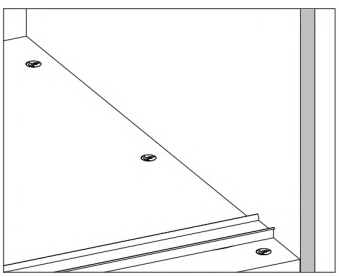

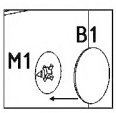

B1



ø17/4mm x5

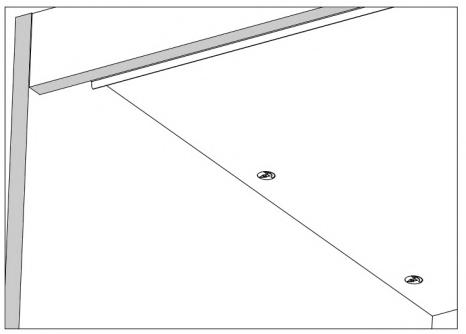

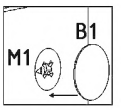

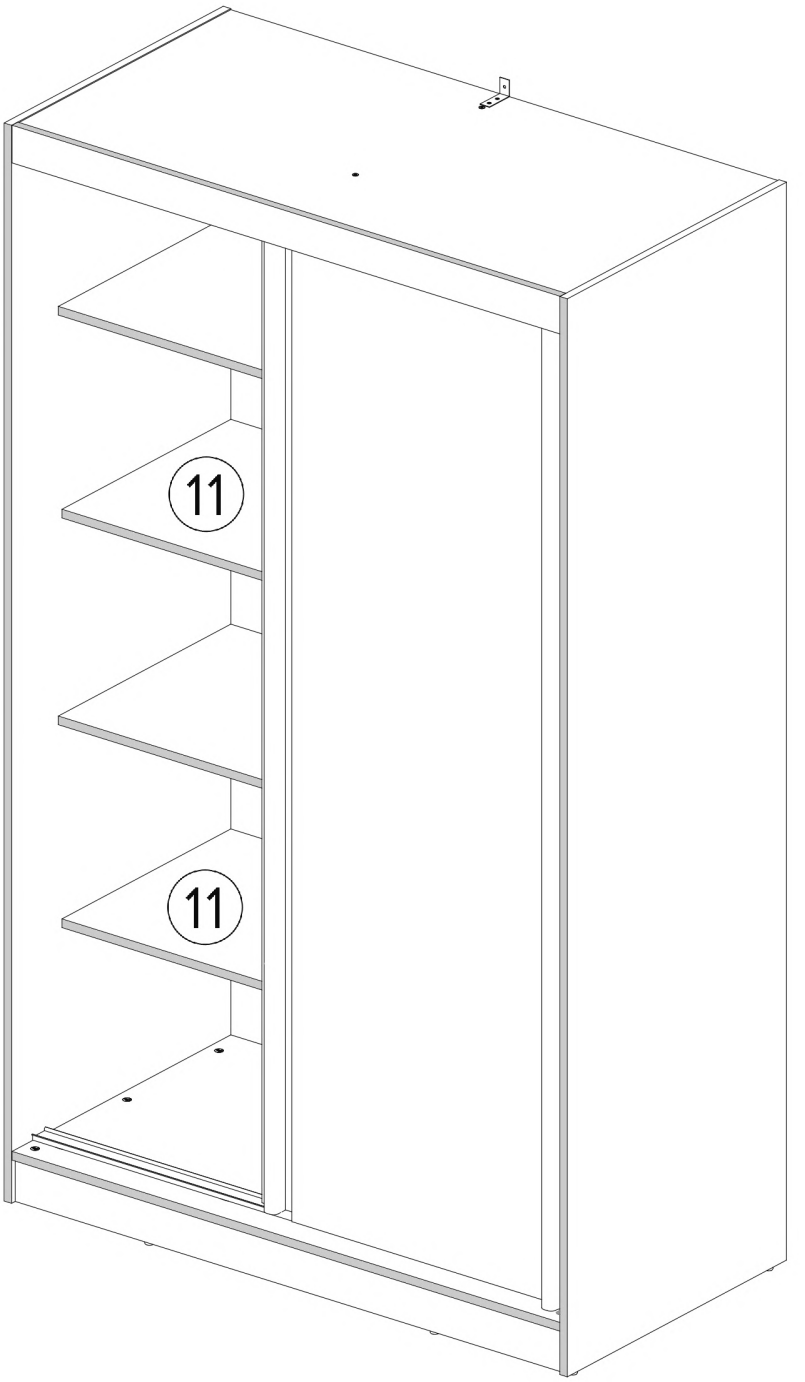

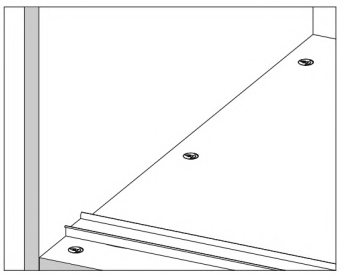

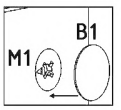

V50



x4

V50

